Installation Manual

1830mm

THRUSLIDE DDV TOP MOUNTED TUBULAR TRACK

See additional website PDF and tables with clear diagrams showing the track position

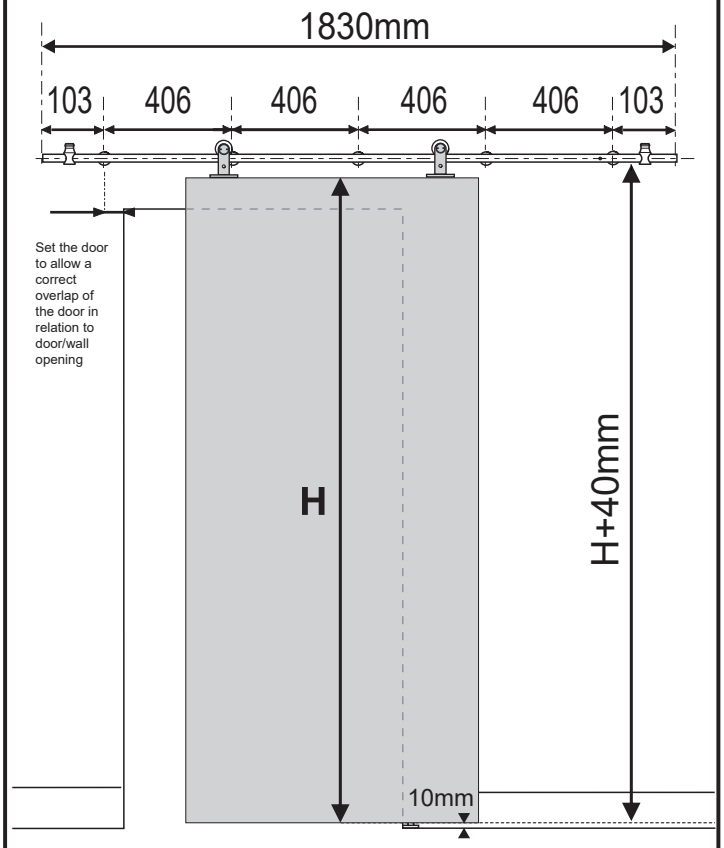

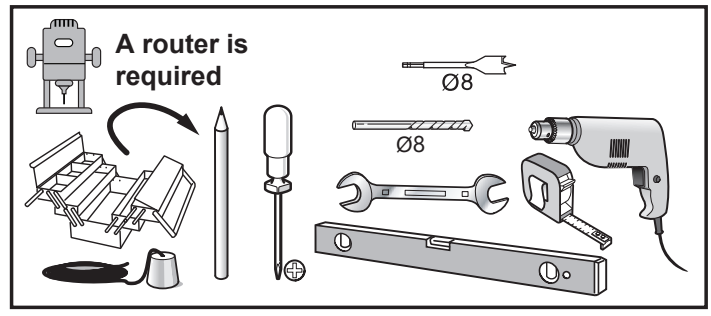

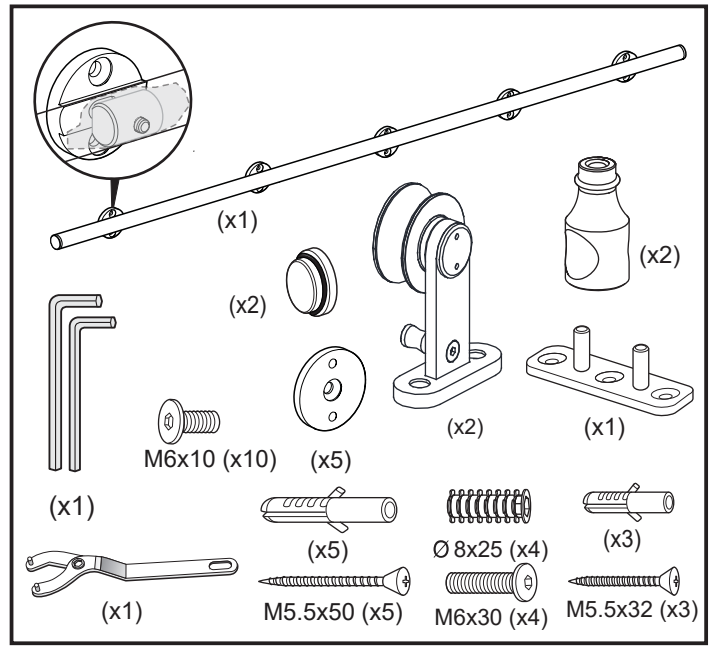

1

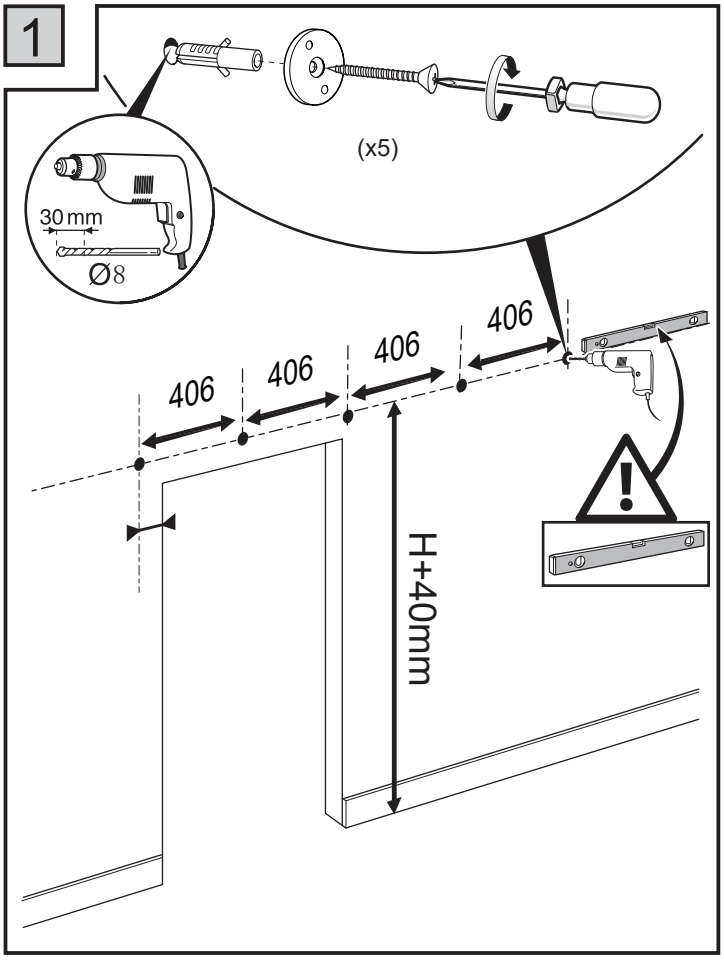

2

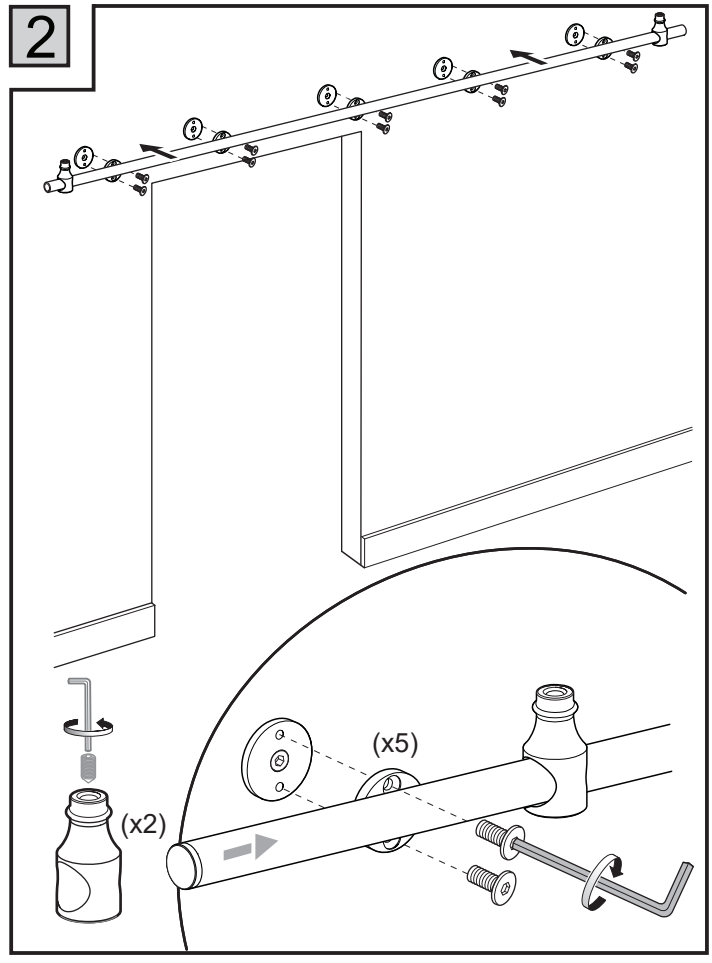

3

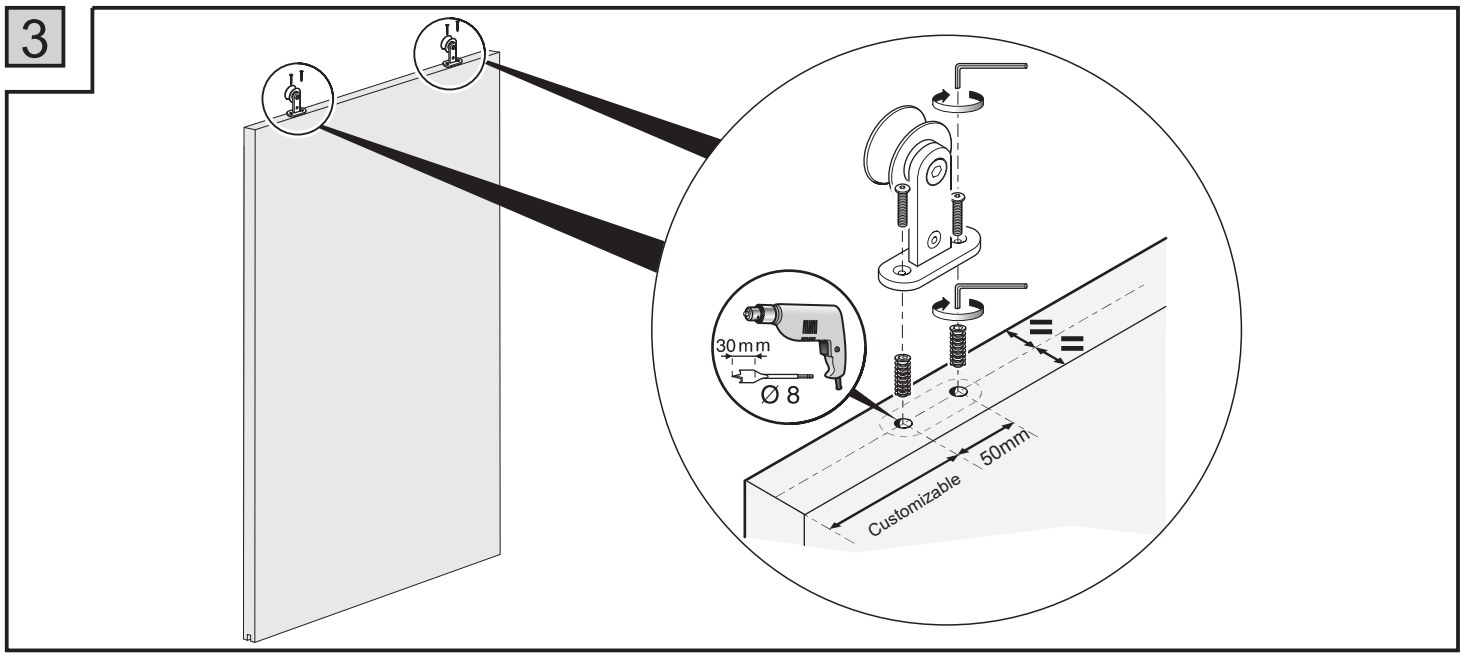

4

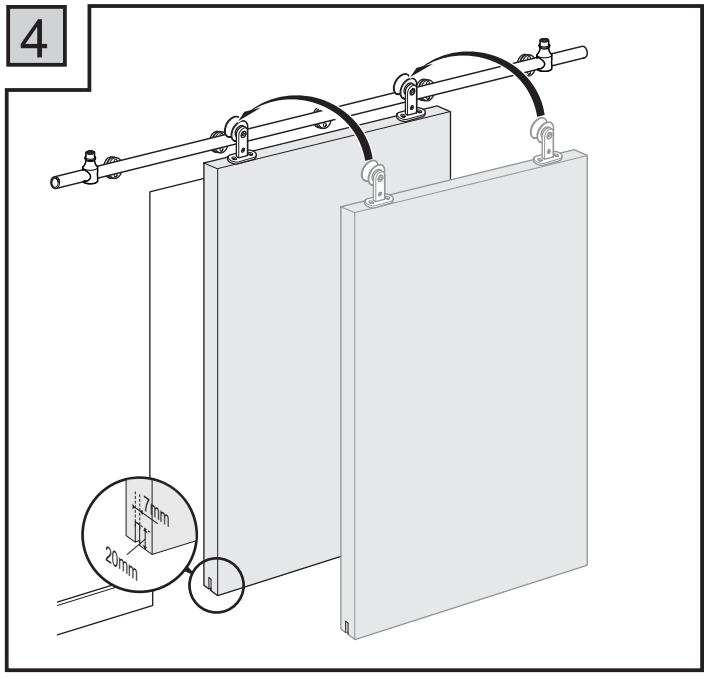

5

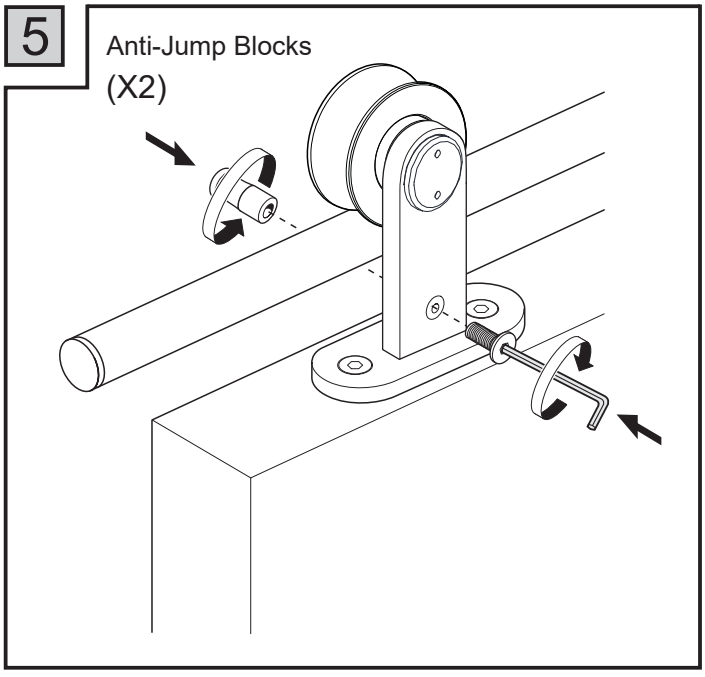

6

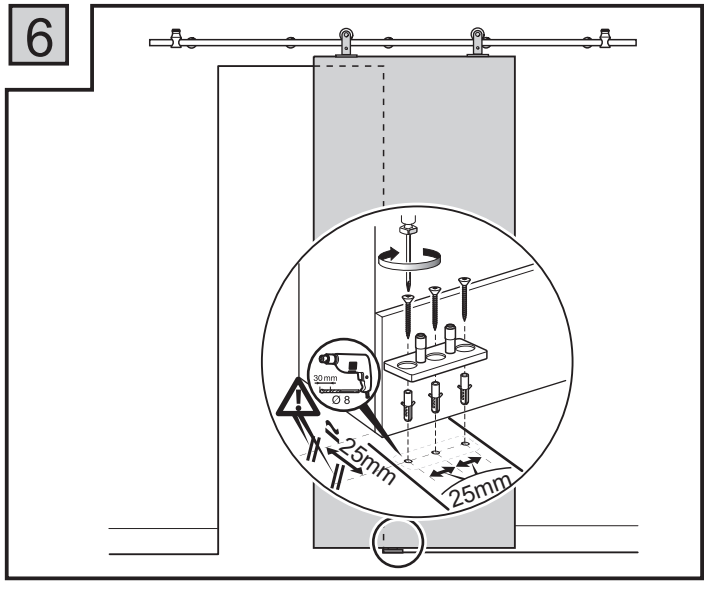

7

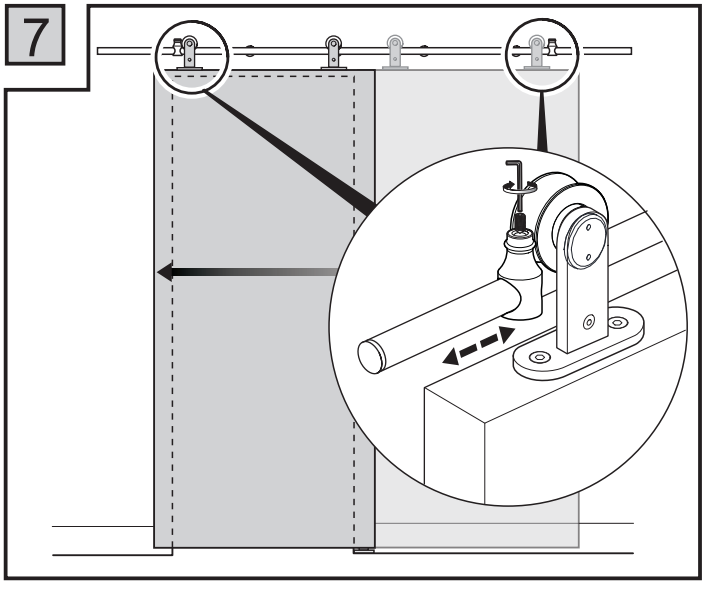

DirectDoors.com®
Bay 5 Eastfield Industrial Estate, Penicuik, Edinburgh, EH26 8HA, Scotland, Telephone: 01968671681, Email: info@directdoors.com