THRUFOLD

COMPONENTS & FITTING GUIDE

3+1

ASSEMBLY:
Two person
8 hours
Must be carried out by a trained carpenter.

TOOLS:
7mm and 13mm spanners will be required, along with a full range of carpentry tools, including planes, routers, drills and chisels.

DOOR CONFIGURATIONS & SIZES AT A GLANCE

DOOR CONFIGURATION	DOOR WIDTH OPTIONS	OVERALL WIDTH WITHOUT FRAME	OVERALL WIDTH INC. FRAME	OVERALL HEIGHT WITHOUT FRAME	OVERALL HEIGHT INC. FRAME
3+1	686mm	2765mm	2825mm	2055mm	2085mm
3+1	762mm	3069mm	3129mm	2055mm	2085mm
3+1	838mm	3373mm	3433mm	2055mm	2085mm

Frame material may be supplied slightly oversized for on-site cutting, please refer to cutting size above.

DirectDoors.com®

Contact: +44 (0)1968 671 681
enquiries@directdoors.com

All content and images are copyright protected by DirectDoors.com Intellectual Property Office Trademark No: UK00003238454

IMPORTANT THRUFOLD INFORMATION

Please be aware that each image or PDFs for our internal folding doors show a position of a flush pull, hinges, slip bolt etc. but the position of each item is very dependent on how you and your carpenter decide the doors should open.

For a 3 door set, the flush pull may be centred on the middle door, or a latch handle fitted to the main opening door. In either case, the slip bolt and holdback catch must be fitted.
All other details must be decided before fitting.

The small door stops (25x12mm) for some of the configurations will have to be “offset” so one leg allows the main door to close against it in a traditional manner whereas the same door stop will be fitted on the opposite side at the other frame leg.

Walnut veneered doors are supplied with white primed frames and associated material, walnut veneered frames are not available but we could supply unfinished oak frames at an extra cost to allow you to stain them.

Unfinished and prefinished oak veneer doors are supplied with unfinished oak veneer frames and associated material. White primed, white painted or coloured doors (Grey/Ivory/Laminates etc.) are supplied with white primed frames and associated material.

Any mention of pre-finished, pre-finishing or fully varnished refers to the door alone.

Please note that we may use narrower doors for some sizes of this product whether panelled or glazed, they may have narrower panels or glass than the image shown, this is because the timber sections that make up the doors construction remain the same size across the full range of door sizes.

IMPORTANT

Please note: You can only assemble these door configurations using the frame provided.
Your warranty will be invalid if other alternatives are used.

All loads are taken by the top track to ensure smooth, light operation and long life.

Prior to installing this doorset, inspect for damage and do not proceed to fit if any noticeable damage or defect is evident. The door system in its entirety should be stored in a dry, flat location before installation.

CAUTION

SAFETY: This product needs to be installed by a competent tradesperson with assistance.
Two people are required to carry out the installation, as some components are heavy.

The outer frame requires fixing to the supporting structure above the opening.

The opening MUST be capable of carrying the load of the door system in all conditions.

SIZING

All sizes are provided in millimetres. The technical specifications are not to scale.

COMPONENT LIST

3+1

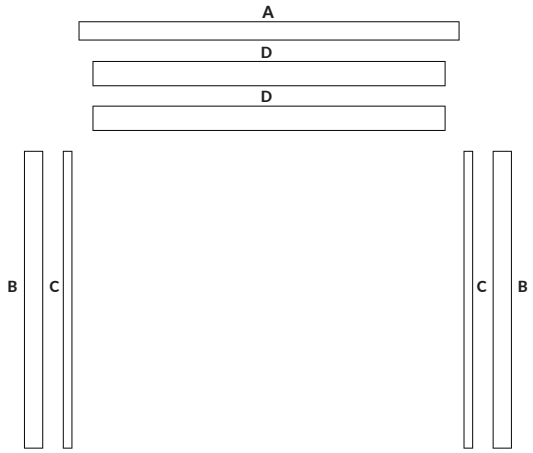

FRAME

Frame linings are an MDF solid core construction.

FRAME LINTOL	A - x1
FRAME SIDE/LEG	B - x2
FRAME STOP	C - x2
TRACK COVER	D - x2

SCREWS AND CAPS

FRAME SCREW	x5
TRACK COVER SCREW & CAP	x12

PINS FOR FRAME STOPS INCLUDED

(extra screws, screw caps and pins are supplied)

TRACK

The items below will be delivered from our preferred track supplier:

ALUMINIUM TOP TRACK	x1
PIVOT SET	x2
FOUR WHEEL HANGER SET	x1
HANDLE HINGE	x2
HINGE	x4
FLUSH BOLT	x3
HOLDBACK CATCH	x1

*Not to scale, dimensions will vary depending on the option chosen.

TRACK COMPONENTS

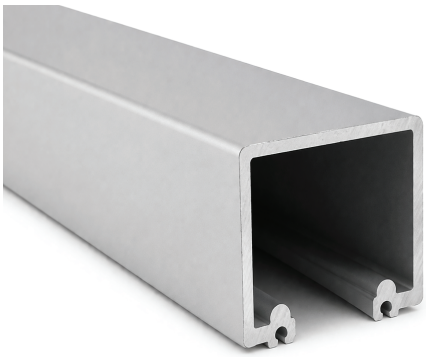

1x ALUMINIUM TRACK

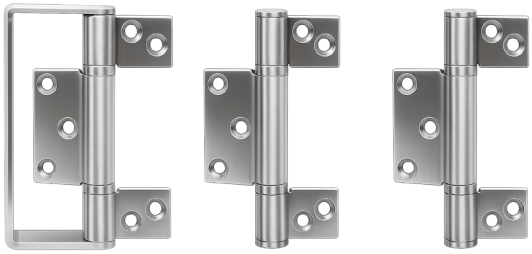

2x HINGE PACK

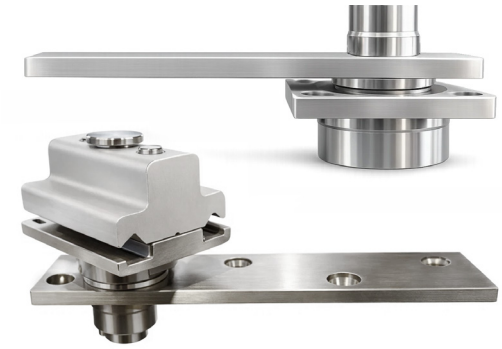

2x TOP & BOTTOM PIVOT

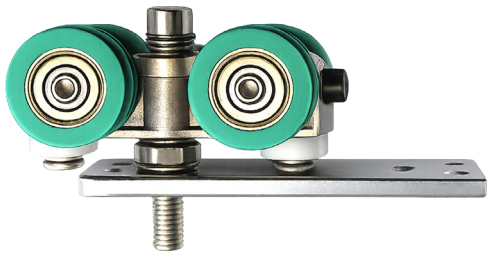

1x 4 WHEEL AND HANGER SET

3x FLUSH BOLT

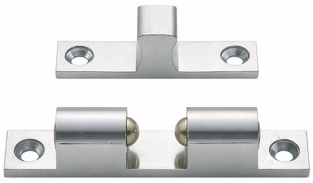

1x HOLDBACK CATCH

Technical Specifications:

Maximum door weight: 50kg
Maximum door height: 1981mm
Door Thickness: 35mm

Track Dimensions:
42mm (w) x 40mm (h)

FRAME

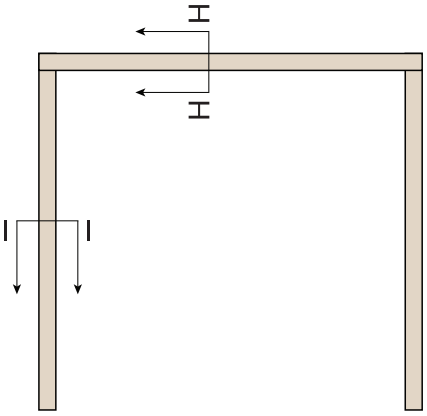

SECTION I-I

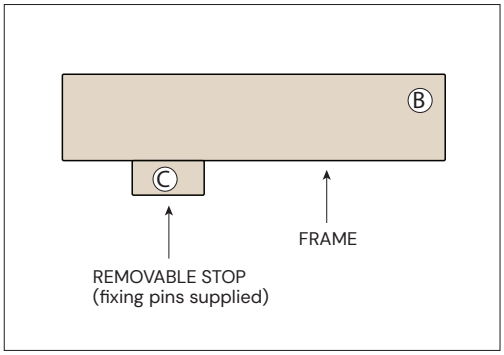

Ⓐ FRAME LINTOL
Ⓑ FRAME LEGS*
Ⓒ FRAME STOPS*
Ⓓ TRACK COVERS

**sections may required some on site adjustment.*

Frame 133mm

SECTION H-H

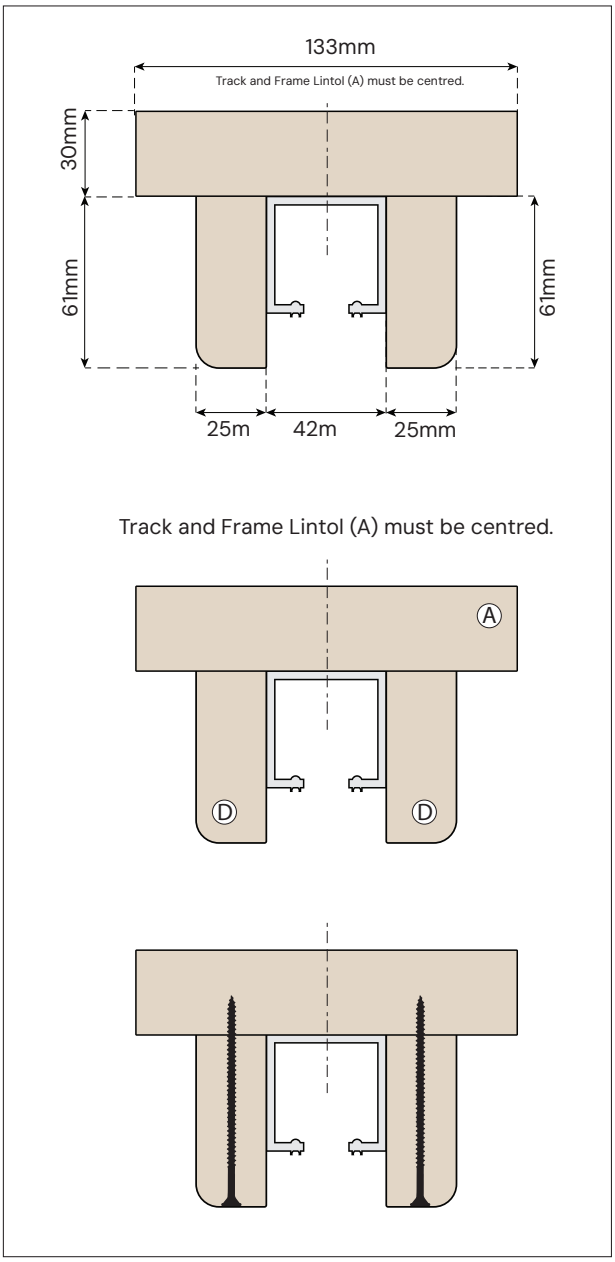

Frame 108mm

SECTION H-H

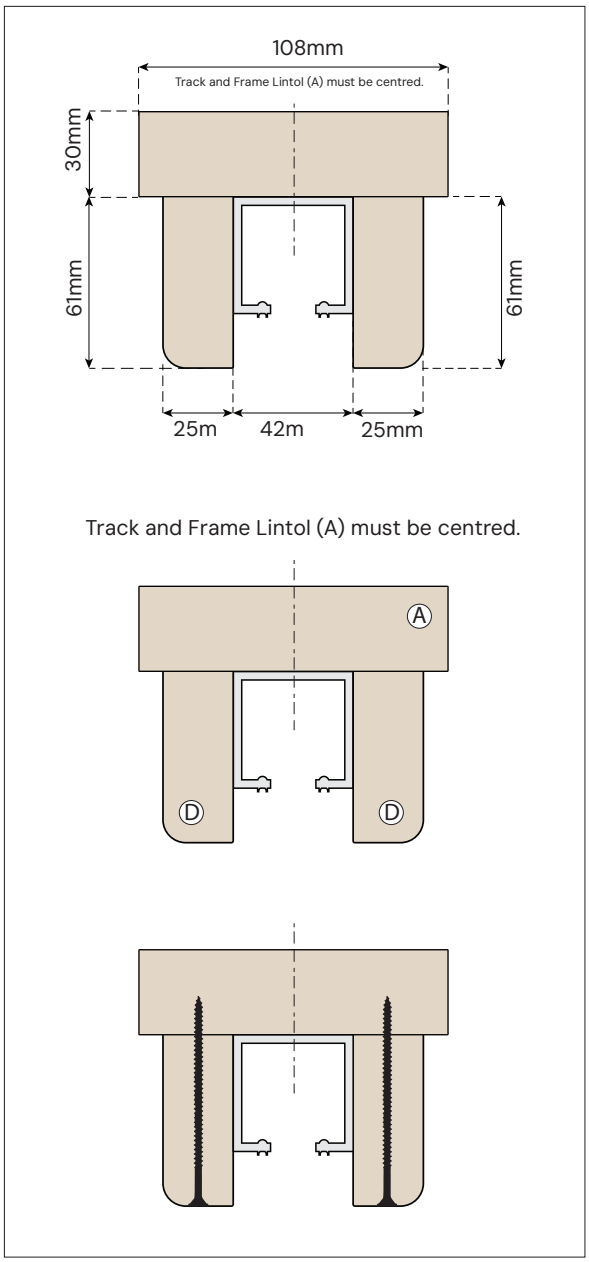

FRAME

FRAMES MUST BE PERFECTLY ALIGNED ON ALL THEE AXIS

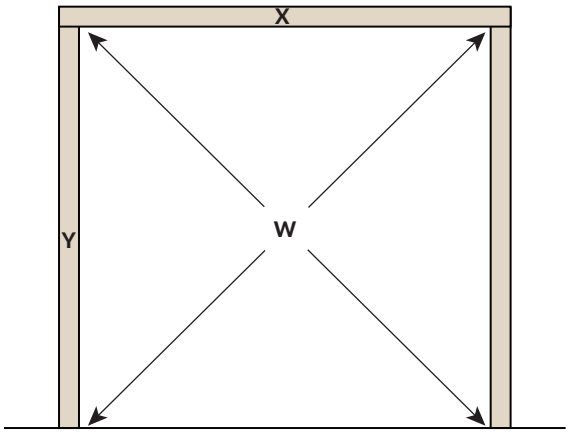

FRONT VIEW

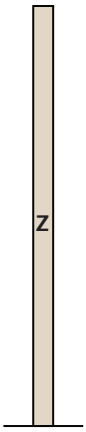

SIDE VIEW

X: horizontal
Y: vertical
Z: lateral = all must be true
W = must be perfectly symmetrical/square

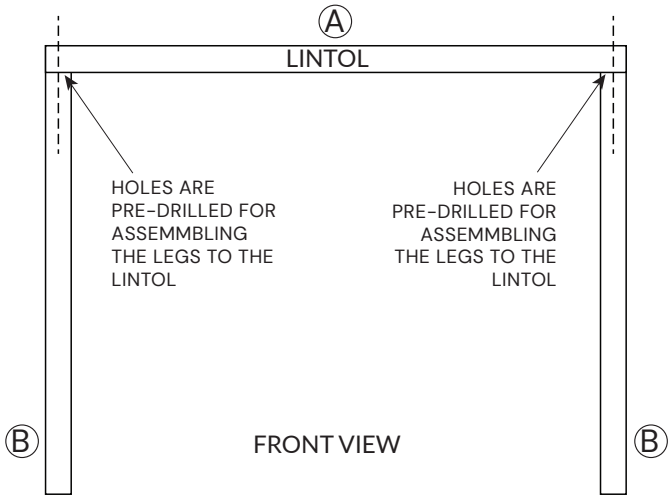

Frame legs (B) and lintol (A) may be supplied longer than required.

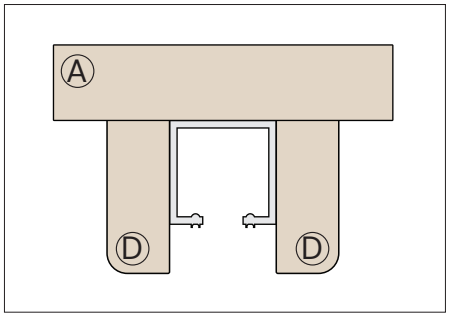

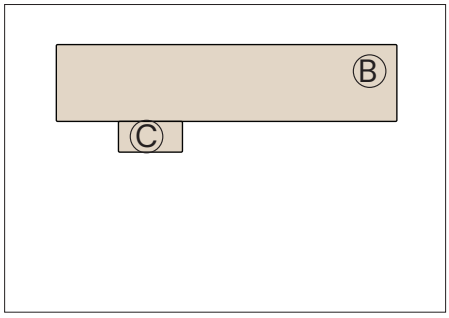

FRAME LINTOL	A - x1
FRAME SIDE/LEG	B - x2
FRAME STOP	C - x2
TRACK COVER	D - x2

Do not attach the frame stops (C) or track covers (D) until the track and door installation is complete. The track covers (D) must be fitted last.

DOOR CONFIGURATION

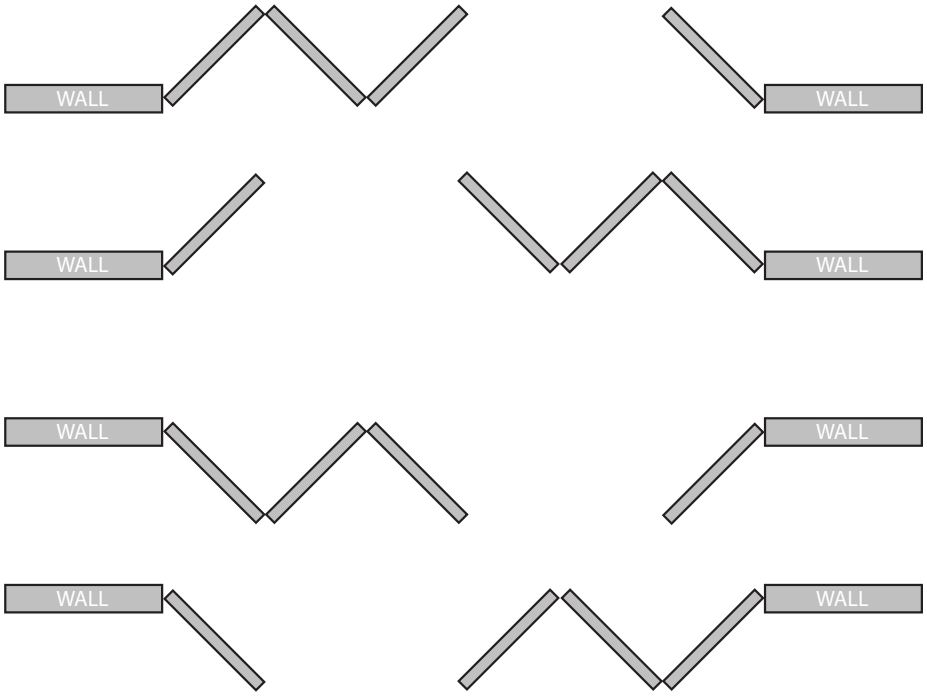

DOOR HARDWARE ORIENTATION

SEMI-OPEN

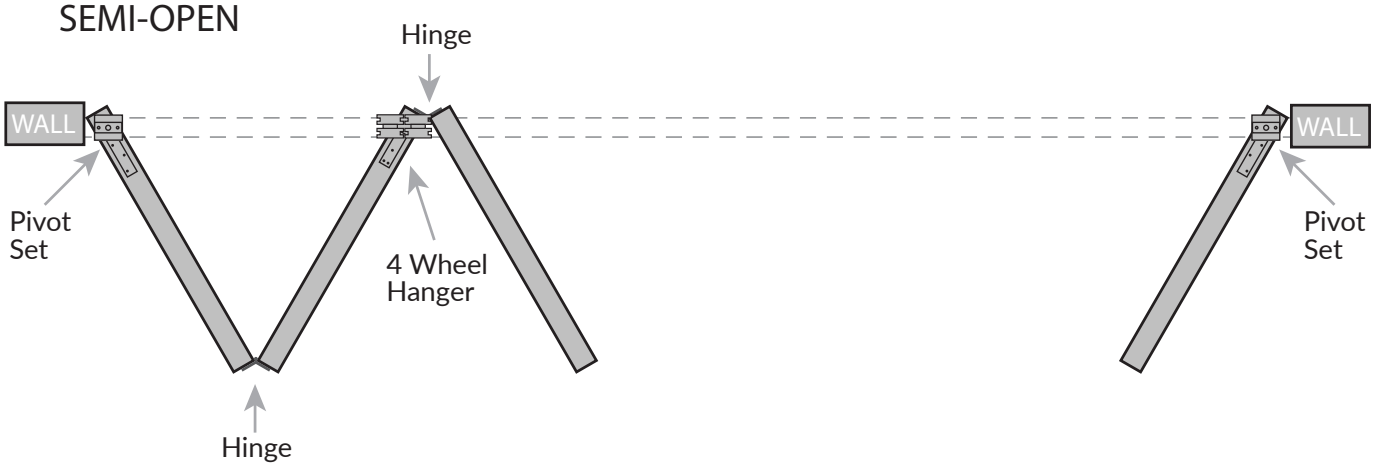

CLOSED

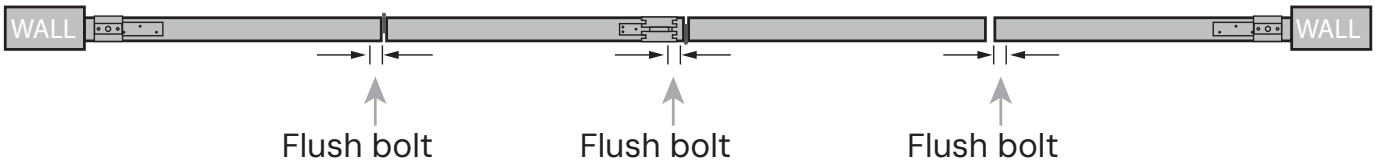

Fit the flush bolt to the bottom of the correct door. Other positions may work just as effectively, but please ensure they are suitable before cutting out. Refer to page 16 for flush bolt fitting guidance.

HANDLE HINGE POSITION

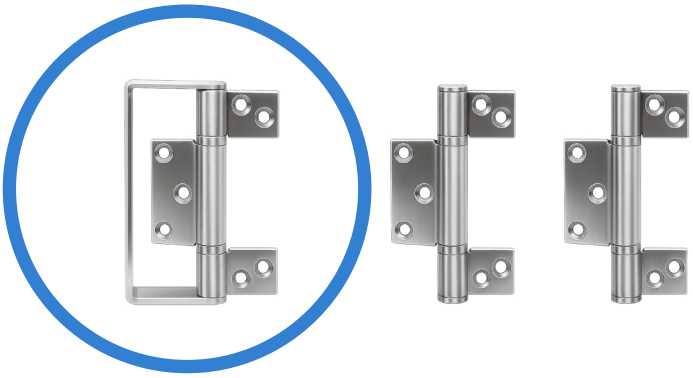

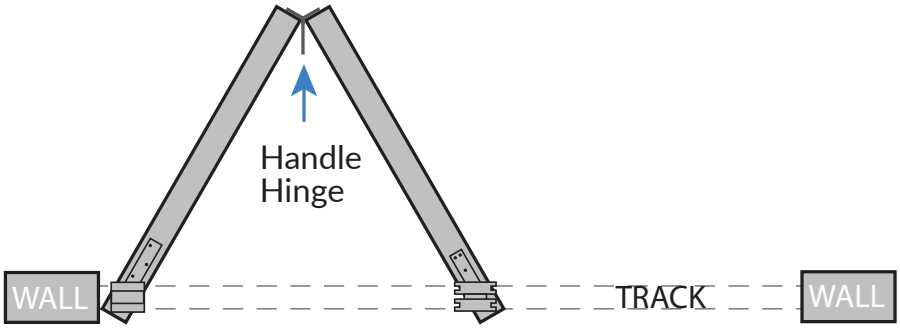

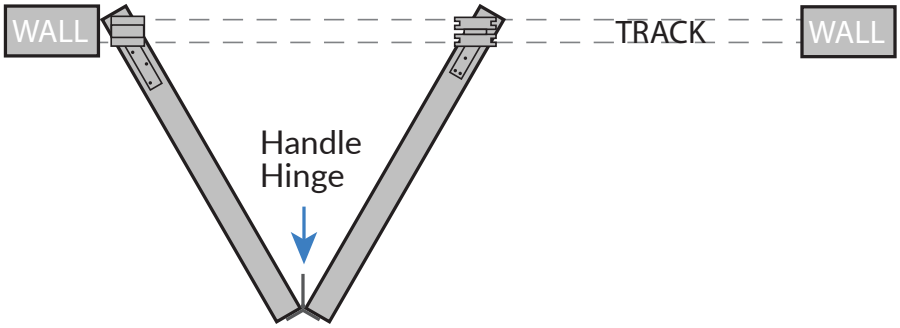

NOTE: Always open the door carefully against the hinge pull handle to avoid door damage.

The handle hinge should be fitted only once the top and bottom hinges are in place.

DOOR SPECIFICATION

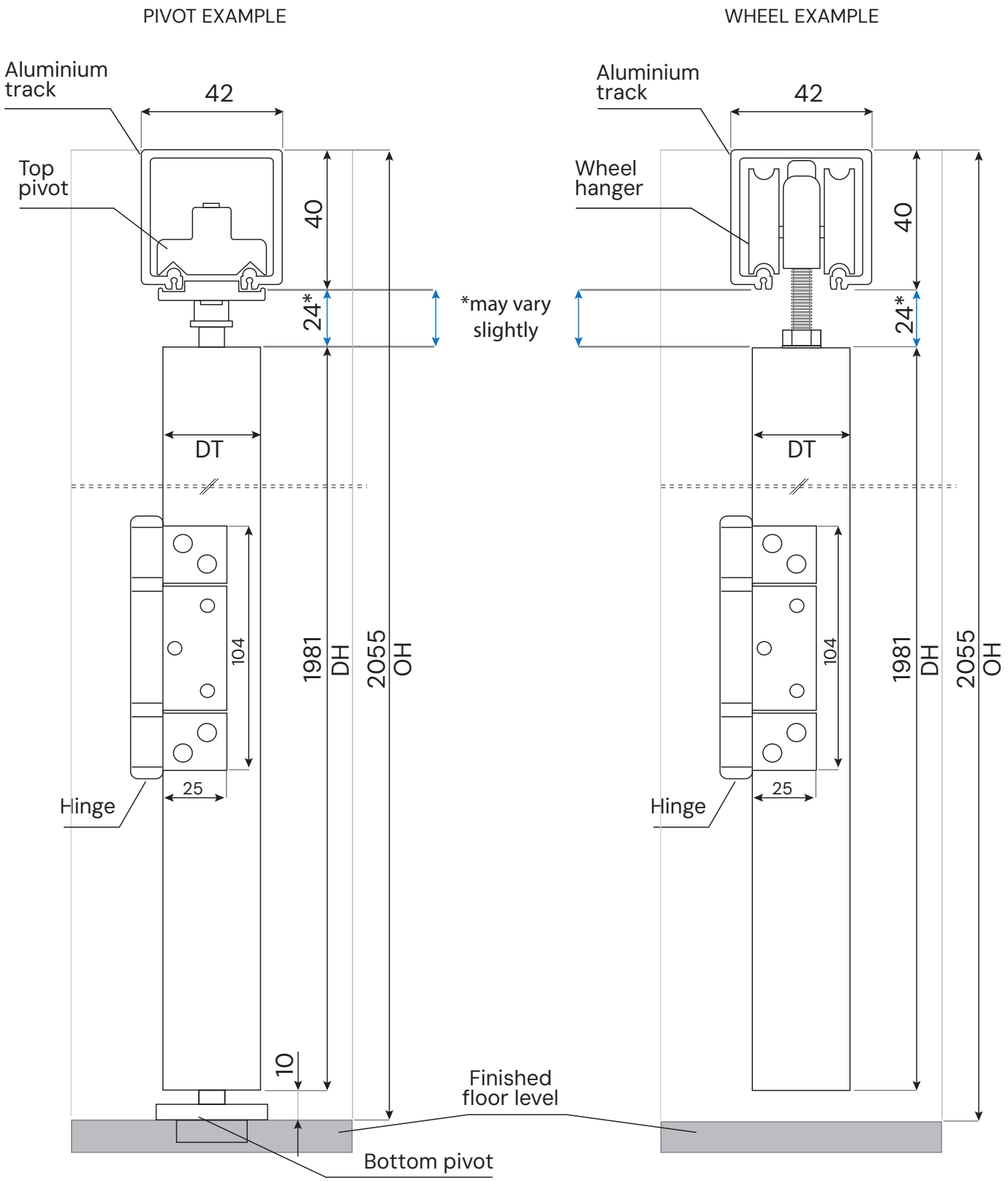

Maximum door weight 50kg

DT - Door thickness: 35mm
DH - Door height: 1981mm
OH - Opening height (not including frame lintol supplied).

DOOR SPECIFICATION

For full pivots & wheel hanger cut outs specs see page 12.

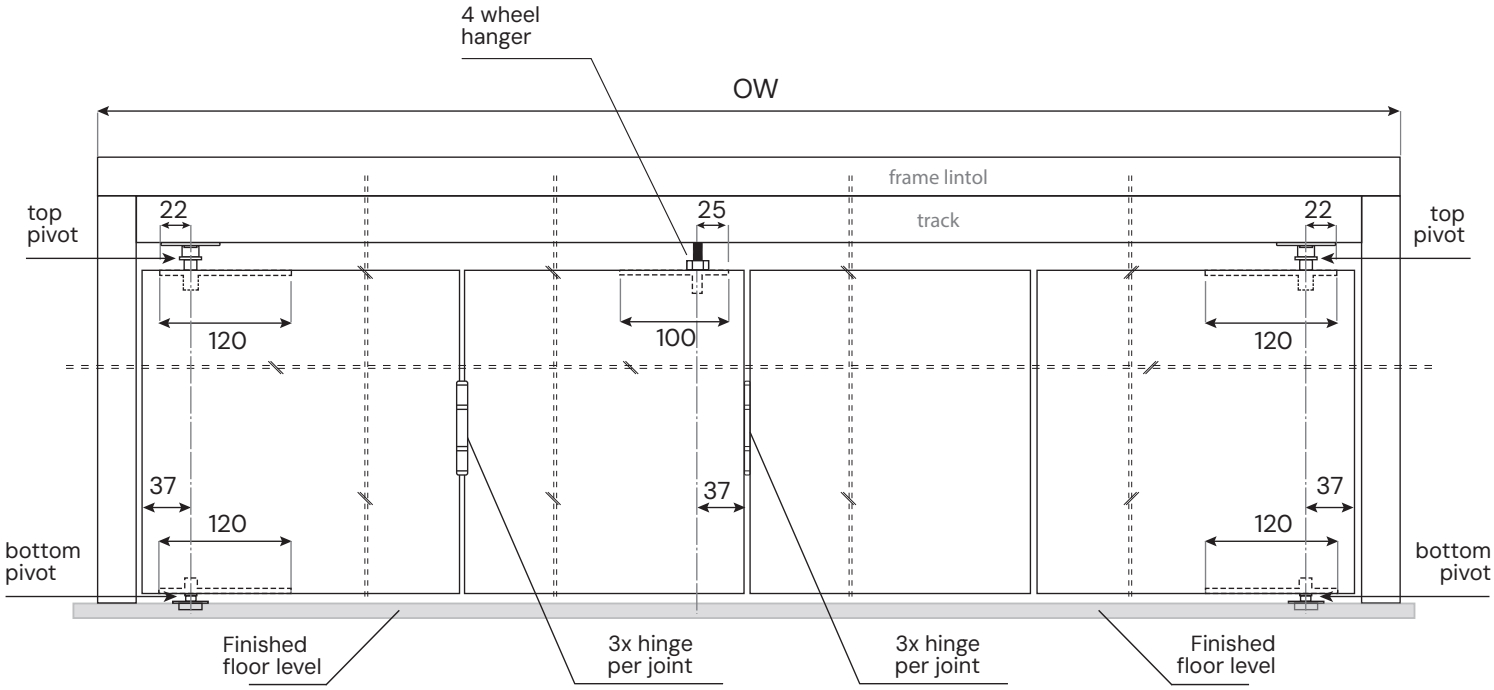

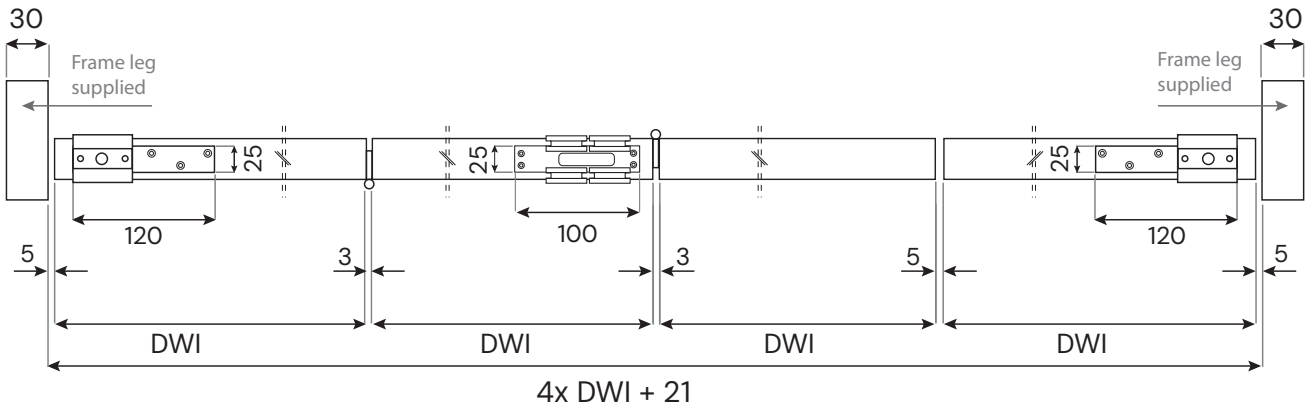

DWI - Door width
OW - Opening width

THRUFOLD TRACK FITTING INSTRUCTIONS

Step 1. Fitting the wheel hanger and top pivot to the track.

Detach the bottom wheel hanger plates.

Don't remove the nut from the bolt.

Slide the wheel and top pivot into the track before fitting the track.

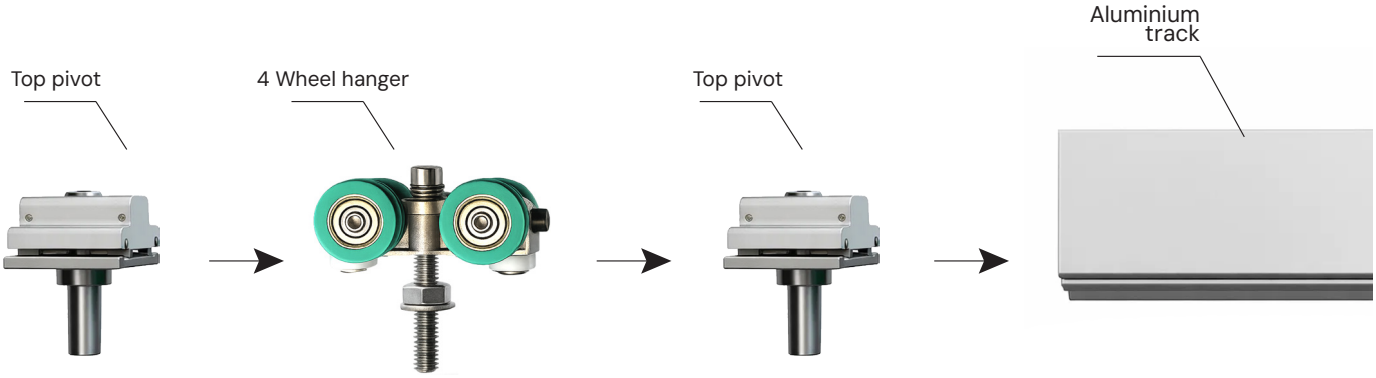

Tighten the top pivot using an Allen key to secure it in the right position.

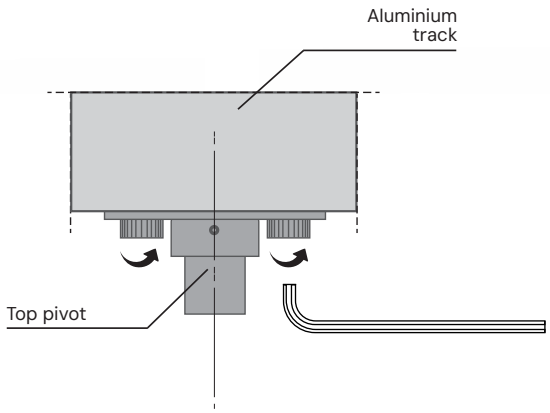

The centre of the top pivot pin should be positioned 42mm from the edge of the track.

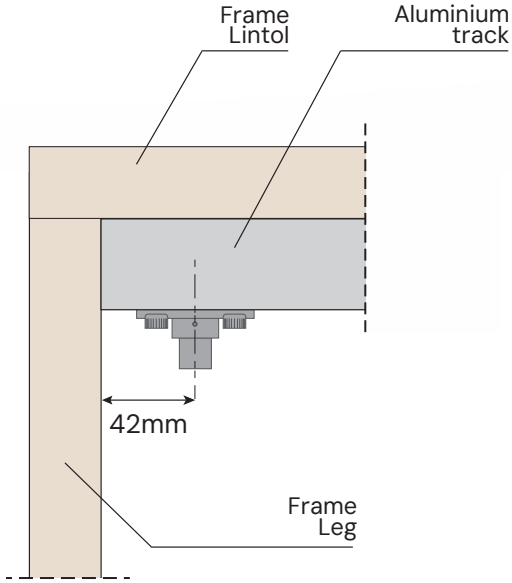

Step 2. Door preparation: cut outs for pivots.

TOP PIVOT

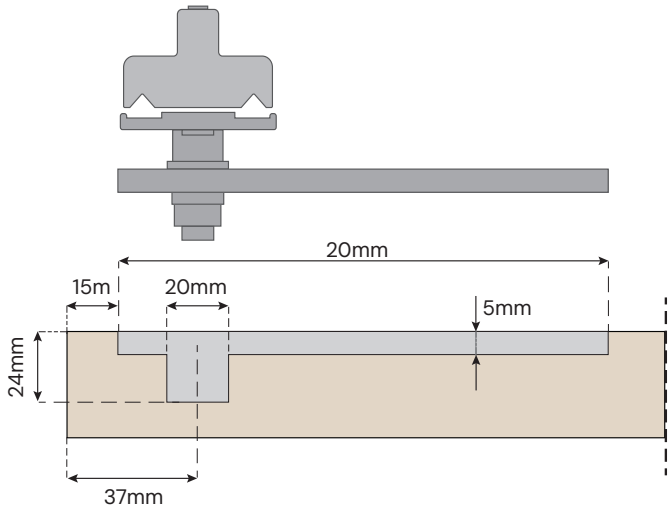

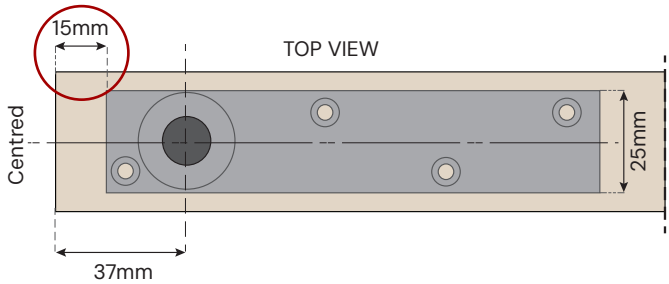

BOTTOM PIVOT

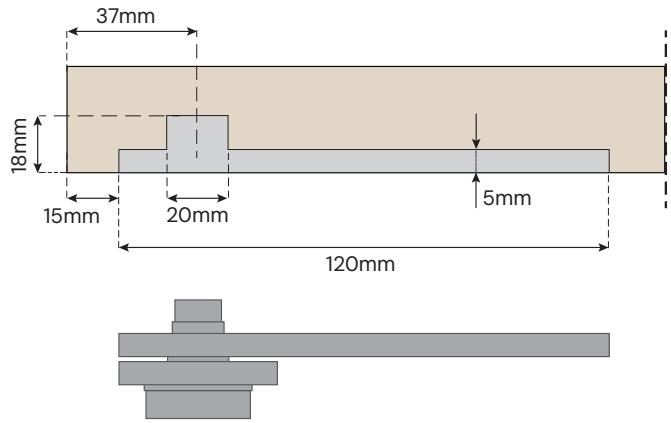

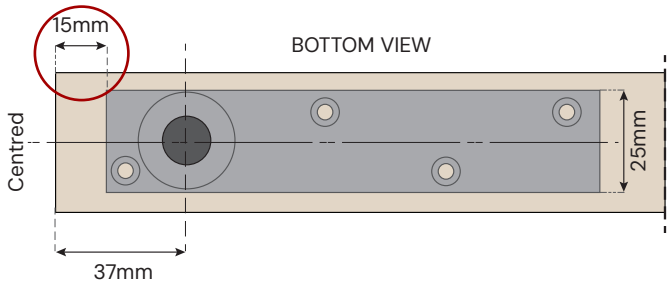

Step 3. Door preparation: cut outs for wheel hanger plate.

NOTE: Before making the routing for plates see Step 5 for door configuration.

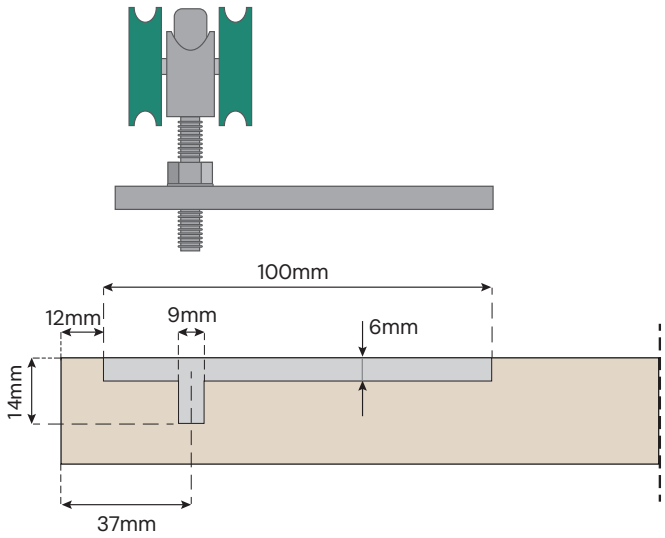

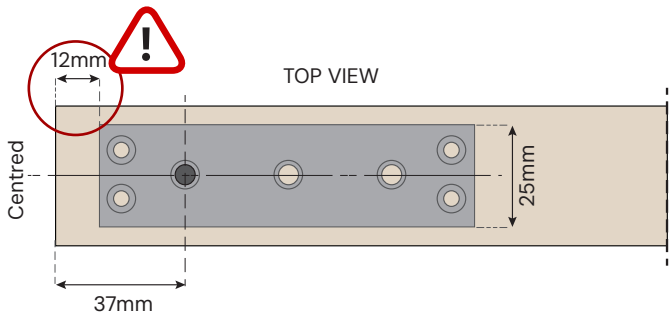

Step 4. Bottom pivot floor cut out.

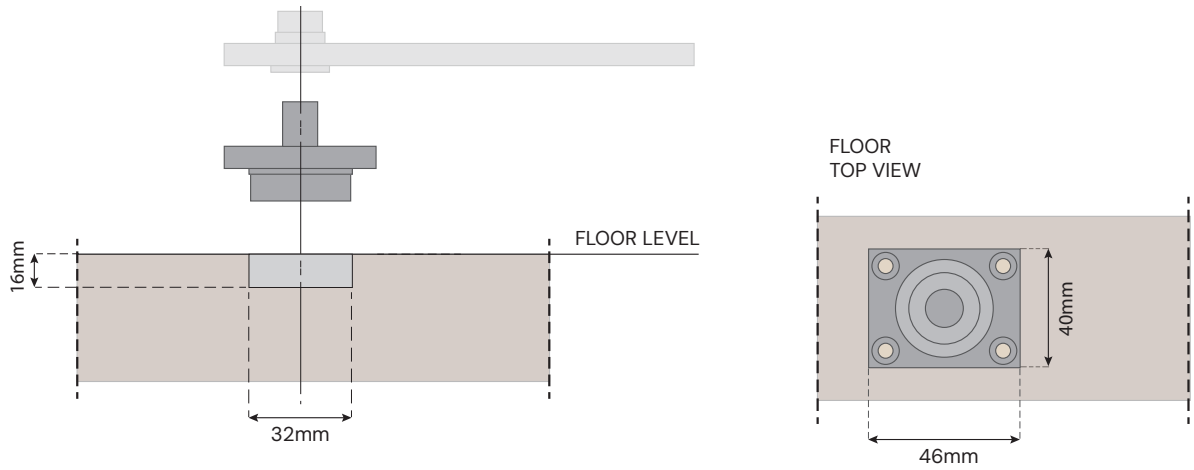

The centre of the floor cut out should be 42mm from the inside edge of the frame leg.

Step 5. Preparing the door and track & door configuration.

Recommended hinge position:

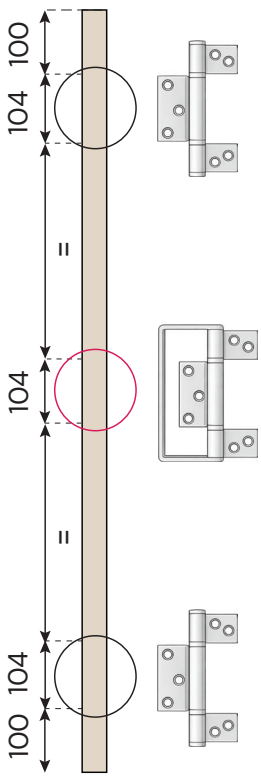

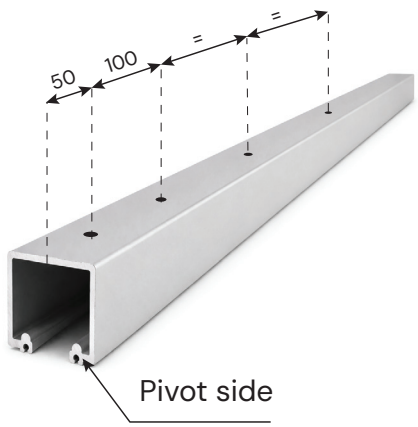

Track will be provided pre-drilled.

Fit the handle hinge only after fitting the top and bottom hinges.

Door configuration:

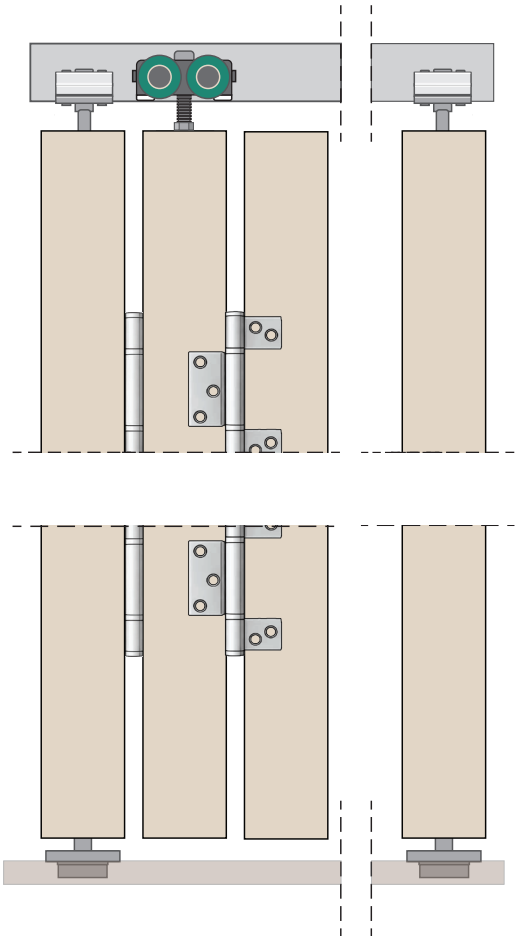

Step 6. Bottom pivot base.

Fix the bottom pivot base with 4 screws:

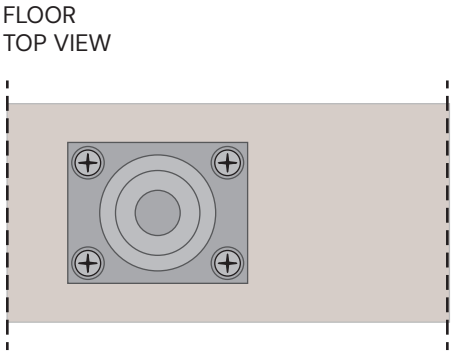

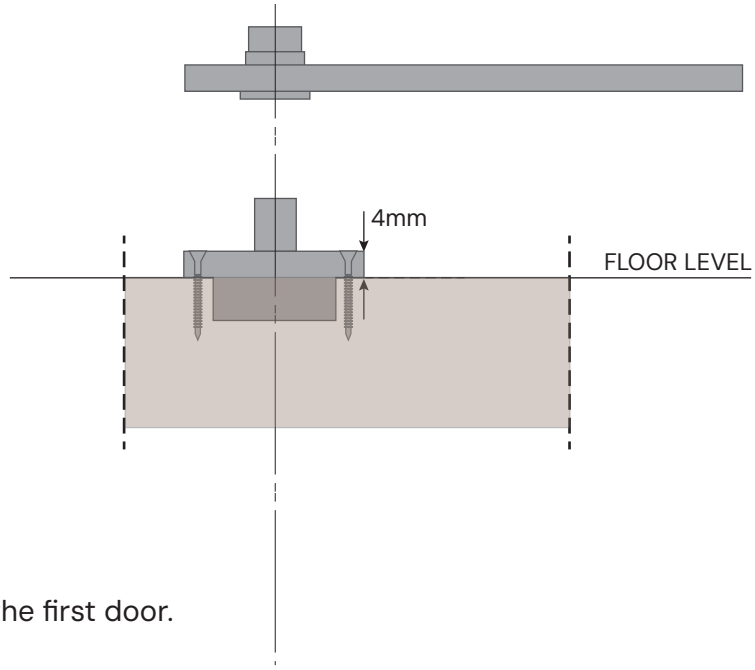

Step 7. Top and bottom pivot assembly into the first door.

a. Raise the top pivot pin so that the door can go under assembly.

b. Insert the door on to the bottom pivot pin in the base plate.

c. Release the top pivot inside the door with the top plate.

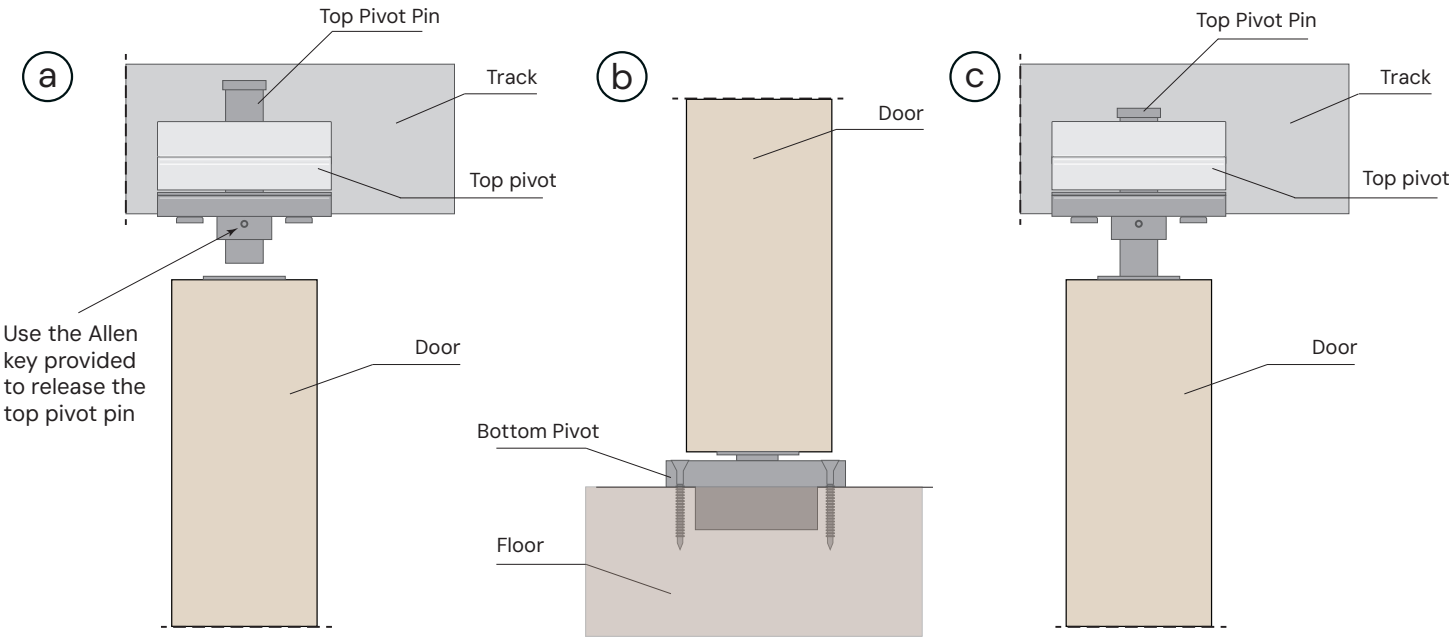

Step 8. Levelling the door and inserting the next panel.

a

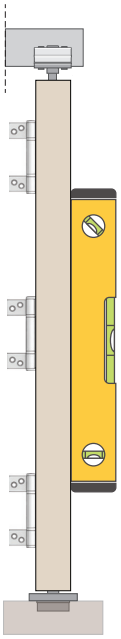

a. Level the door. the door should be perfectly level on the vertical if you have fitted the frame and the top/bottom pins are aligned exactly

b. After ensuring the door level, tighten the grub screw to secure the top pivot pin.

b

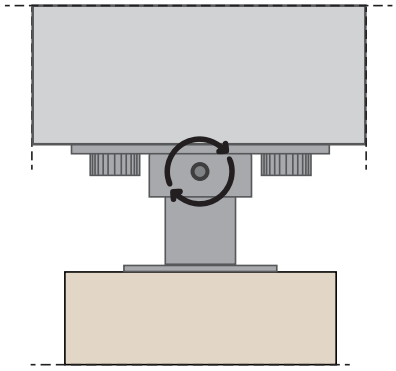

c. Affix the wheel hanger to the door **top plate that forms part of the wheel assembly.**

Bring assembly in position as seen in the left picture, ensure the level by adjusting the hanger threaded bolt up or down and after adjusting turn the lock nut tightly in place.

c

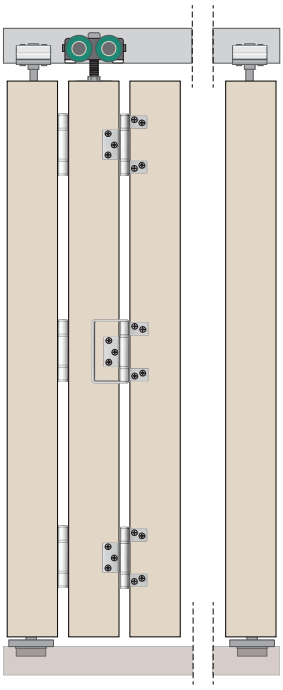

c

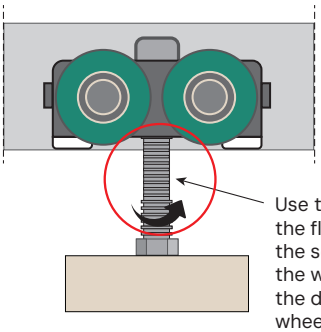

Use the spanner on the flattened part of the screw to secure the wheel hanger on the door with the wheel hanger plate.

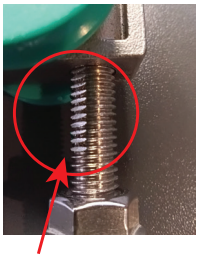

Left and Right sides of the wheel hanger threads are partially flattened.

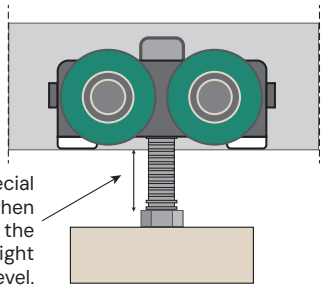

Take special care when adjusting the door height to level.

Use a 7mm and 13mm spanner to adjust the bolt and nut.

FLUSH BOLT FITTING

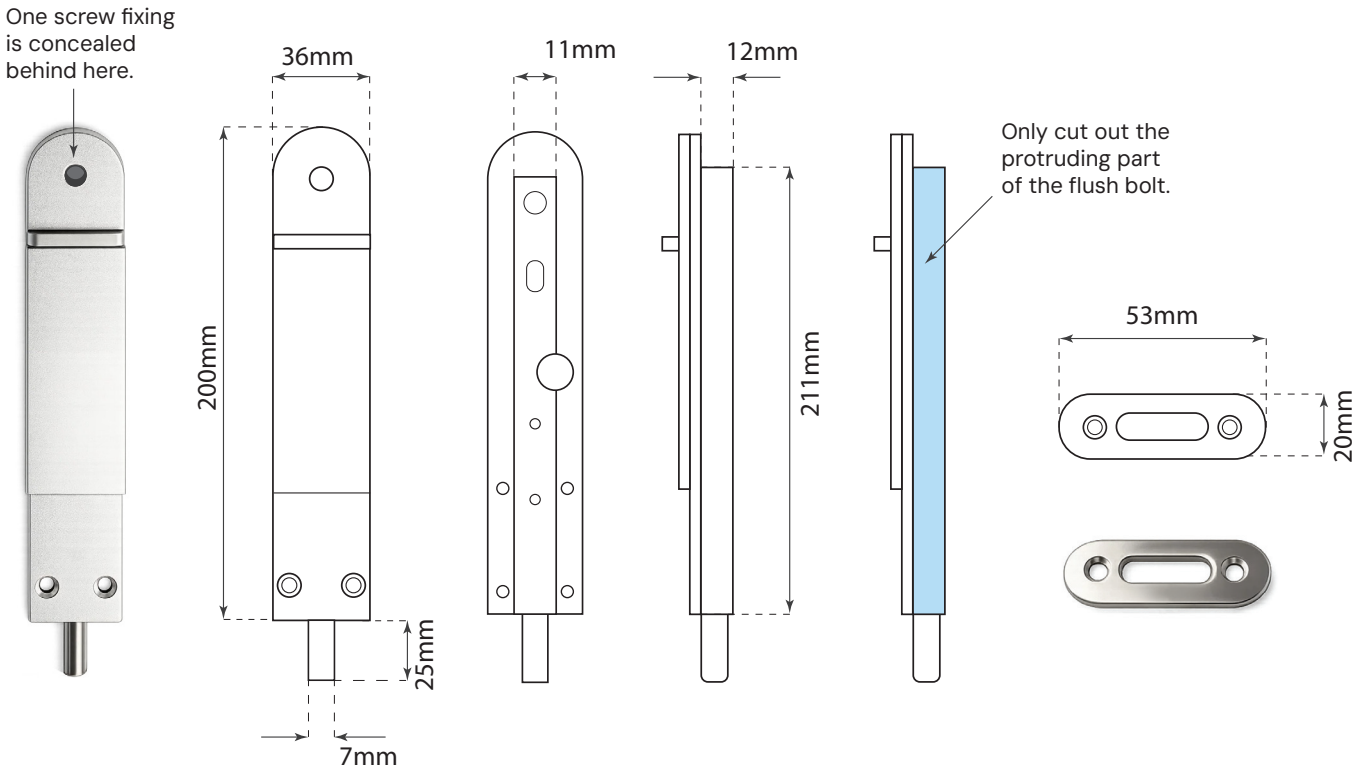

BOLT POSITIONING

Bottom of Door Advice (Preferred Method):

When fitting bolts to the bottom of the door be aware that the floor will need a recess cut to accommodate the bolt keeper, wooden floors are the easiest to recess, other floors depending on the floor type may need to obtain rawl plugs and decision whether to recess the bolt keeper or fit it on the surface of the floor.

TOP OF DOOR ADVICE:

When fitting bolts to the top of the door be aware that the top channel will need drilling to for a keeper aperture in the top track.

Additionally, using the supplied bolt keeper will require screw holes, any surface fixed keeper should then be fitted, removed and the thread cut so that the screws do not project into the track channel when the screws are refitted - leaving the screws at their full length will damage the running gear when in operation.

Please note: the rails and stiles are 55mm, do not drill any more 30mm from the edge of the door.

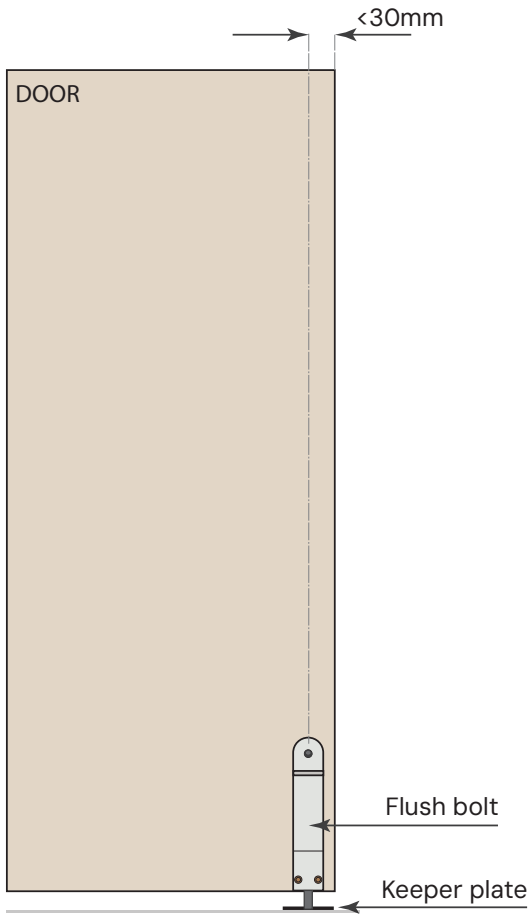

HOLBACK CATCH FITTING
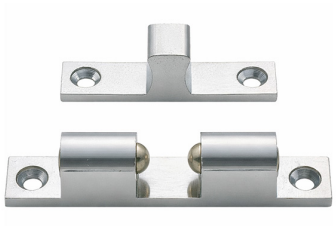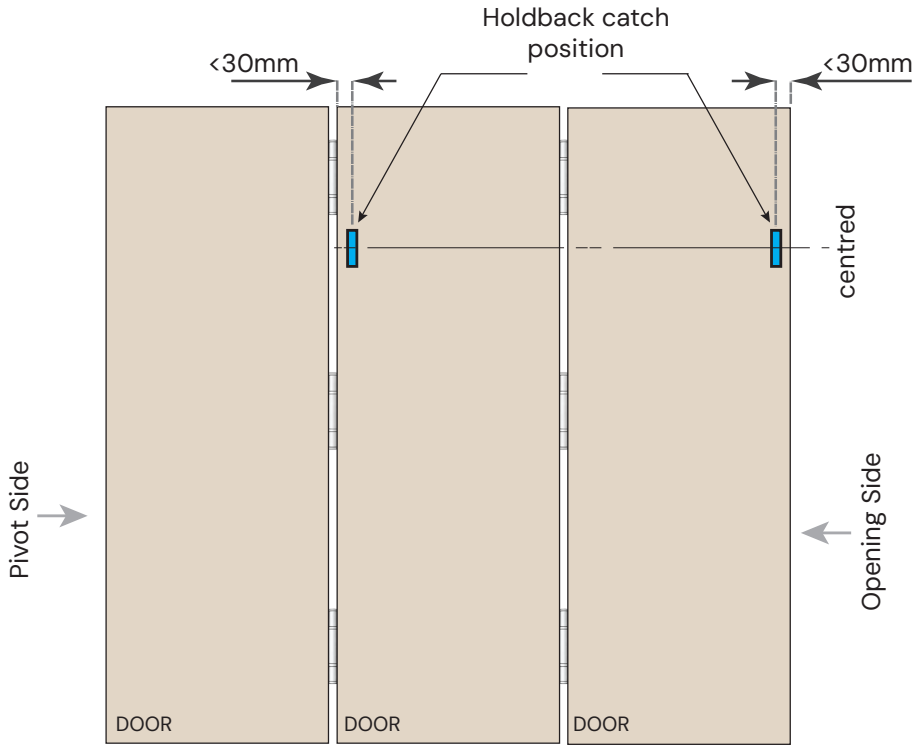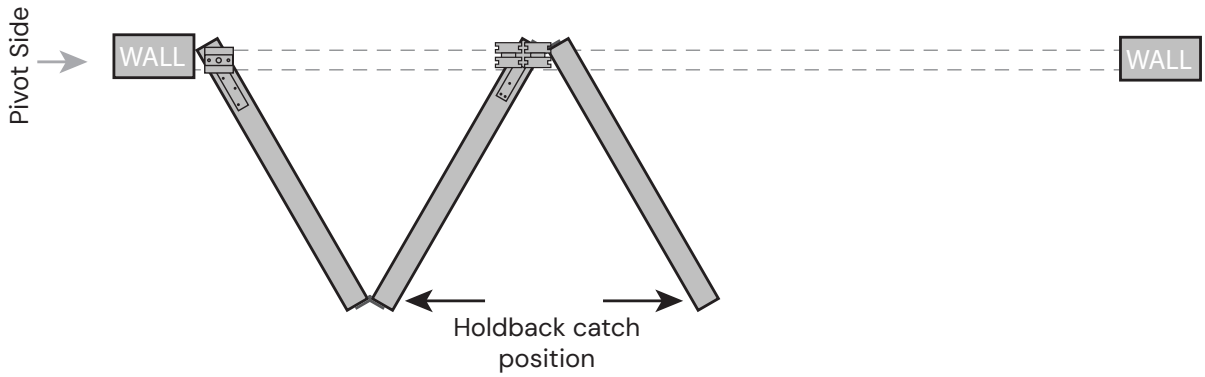
Fit each part of the holdback catch in perfect alignment so that it catches properly and holds the door in the open position. Do not drill more than 30 mm from the edge of the door.